# LEVER CHAIN BLOCK 1.5 TONNE




## TSCBL15

*www.thetoolshed.co.nz*

# TABLE OF CONTENTS

*Product Details* ..... *3*
*Specifications* ..... *4*
*Safety Guidelines* ..... *5*
*Assembly* ..... *7*
*Operation* ..... *8*
*Maintenance* ..... *9*
*Exploded Parts List* ..... *10*

## *Thank You*

*For the purchase of this ToolShed product. We try our hardest to supply customers like you with the best quality products available, at the best price possible. We cant wait to continue working together in the future.*

*Please contact us for any servicing, replacement parts, or questions you might have about your ToolShed product by visiting our website, or calling: 0800 948 665.*

# PRODUCT DETAILS

***Product Model*** *ToolShed Lever Chain Block 1.5 Tonne*

***Product Code*** *TSCBL15*

***DISTRIBUTED BY:***

***Note:***
This manual is for your reference only. Due to the continuous improvement of the ToolShed products, changes may be made at any time without obligation or notice.

***Warranty:***
This product may be covered under The ToolShed warranty. For more information, see our Terms & Conditions at www.thetoolshed.co.nz

# SPECIFICATIONS

| | |
|---|---|
| ***Working Load Limit*** | 1500 kgs |
| ***Standard Lift*** | 1.5 metres |
| ***Lift Hook Opening*** | 34mm |
| ***Pull on Lever to Lift Full Load*** | 206N (21kgf) |
| ***Number of Columns of Load Chain*** | 1 Column |
| ***Load Chain Diameter*** | 8mm |
| ***Net Weight*** | 11 kg |
| ***Dimensions*** | **A:** 163mm<br>**B:** 148mm<br>**C:** 335mm<br>**D:** 368mm<br>**G:** 34mm |

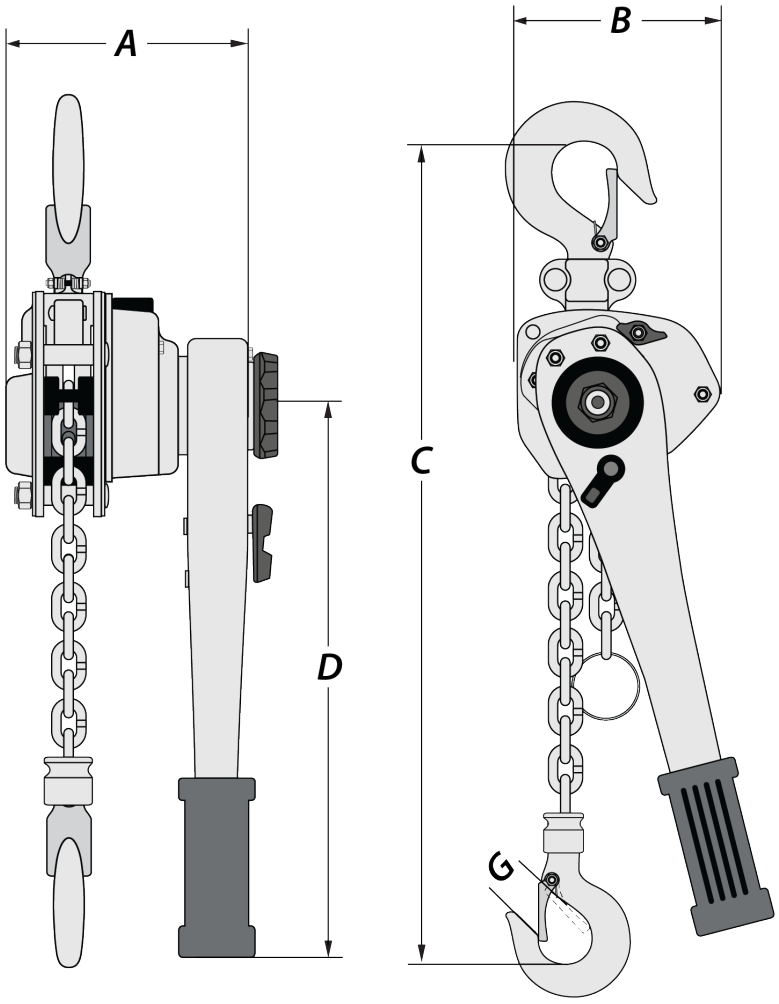

# SAFETY GUIDELINES

## WARNING

***READ ALL SAFETY WARNINGS & INSTRUCTIONS. Failure to follow instructions and warnings could lead to serious injury, electric shock, or fire.***

## *Work Area Safety*

- **Ensure that your work area is kept clean and well lit.** Lack of visibility and clutter greatly increase the risk of accident when using tools.
- **Keep bystanders, pets, and children clear when operating this power tool or machine.** They can cause distraction or risk injury to themselves.
- **Ensure you are not operating the power tool or machinery in the presence of dust, liquids, flammable gases, or anything that can create an explosive atmosphere.** Power tools and machinery can create sparks which can lead to ignition and fire hazards in working environments.

## *Personal Safety*

- **Always wear personal protective equipment (PPE).** Eye protection, ear protection, dust masks, and other protective equipment will help to reduce the risk of personal injury or long-term illnesses.
- **Dress appropriately. DO NOT wear loose clothing that can get caught in moving parts.** Keep hair, loose clothing, jewellery, and anything else that could be of risk, away from moving parts in the machine, or they could become caught therein.
- **Always remain alert and DO NOT operate power tools or machinery under the influence of any substances such as alcohol or drugs, including prescription medications.** Lack of focus could lead to injury or accidents while operating these power tools and machinery.
- **Always ensure proper footing and balance.** Overreaching can lead to slipping and falling which can result in injury or accident.
- **Ensure the power switch is in the OFF position before connecting any battery, or power source to the power tool or machinery.** This can cause injury as tools and machinery can suddenly fire incidentally when live, causing accidents.
- **Use all provided dust collection and extraction attachments, if included.** This equipment, along with the use of PPE dust masks, can help keep you safe from dust, and keep your work site clear from hazards.
- **Ensure loose parts such as wrenches or adjusting keys are removed before starting the power tool or machinery.**

## *Service*

- **Have your tools and machinery serviced at The ToolShed with ToolShed replacement parts.** This will ensure that the safety of the power tool or machine is maintained.

# SAFETY GUIDELINES

## *Lever Chain Block Specific Safety*

- All persons involved in the operation of a lever hoist must read the manufacturers handbook and be completely familiar with all operating and maintenance procedures.
- When operating a lever hoist, always maintain a firm footing and when necessary be secured. Operate the lever hoist from a location that will be clear of the load at all times. People must stay clear of the suspended load. Never use the lever hoist to lift, support or transport people and never lift loads over or near people.
- Before lifting a load, confirm that the lever hoist is in good condition and functioning properly.
- Always keep the load chain well lubricated with light machine oil and protect it from weld spatter and other damaging contaminants such as corrosive chemicals etc.
- Never allow the load chain or hooks to be used as a ground for welding and never touch them with live welding electrodes.
- Never use the lever hoist with twisted, kinked, damaged or worn load chains and never attempt to lengthen or modify the load chain.
- Always use proper slings and attachments in the correct manner and confirm that they are seated properly in the hooks. Also confirm that the safety catch assembly has closed completely and is not supporting any part of the load.
- Never lift more than the rated WLL (Working Load Limit) of the hoist.
- Slack load chain must be taken up carefully. While checking the balance of the load, lift and lower the load <100mm to test the brake system before lifting further.
- Never run the load chain out beyond the range of lift or to the chain end anchor.
- Never allow your attention to be diverted when operating the lever hoist and never leave a suspended load unattended.
- Inspect the lever hoist regularly and never use a lever hoist if its malfunctioned or when unusual performance or damage is evident.
- Never adjust, repair or modify a lever hoist unless you are competent in performing hoist maintenance.
- Never remove or obscure the nameplate on the lever hoist.
- Examine the load chain to ensure that there is no twist with lever hoists 2 falls of load chain; twists can arise from the bottom hook being accidentally turned over through the load chains.
- Confirm that the supporting structure is strong enough to support the load to be lifted.
- The changeover lever must be set to the “UP” position when the lever hoist is under a load during hoisting or pulling operations. In some cases with light loads (less than 2% of the WLL) if the changeover lever or hub is set to the neutral position, the free-wheeling system will function, and the lever hoist will not be able to support the load.
- Lifting a load with two lever hoists is not recommended. If the job is unavoidable, keep the load well within the total rated capacity of the two lever hoists and lift with exceptional care while maintaining proper balance, angle and lifting speed.
- Do not throw or drop the lever hoist from high places. Doing so may cause damage to the lever hoist.

# ASSEMBLY

## WARNING

***The warnings and precautions discussed in this manual cannot cover all possible conditions and situations that may occur. It must be understood by the operator that common sense and caution are factors which cannot be built into this product, but must be supplied by the operator.***

## *Application*

- This Lever Block Chain is a highly efficient and versatile manually operated lifting device. It is suitable for a wide range of applications, including shipbuilding, power generation, transport, construction, mining, telecommunications, machinery installation, lifting goods, and pulling or tensioning loads.
- Its compact design makes it particularly useful in confined spaces, outdoor environments, and overhead applications. The lever block can be operated from various angles, providing a practical solution where conventional lifting equipment may be difficult to use.

## *Construction*

- The lever block features a two-stage gear transmission and a spring-operated clutch system. Its basic operating principle is described below.

## *Features*

The main components of the lever block are manufactured from high-quality steel, providing the following features:

1. Safe, reliable, and durable operation.
2. Efficient performance with minimal maintenance requirements.
3. Compact and lightweight design for easy transport and handling.
4. Low operating effort with high lifting efficiency.
5. Robust construction with a clean, practical appearance.

## *Use of Free Gearing System*

- With no load attached, set the selector lever (40) to the “C” (central/neutral) position. This disengages the drive mechanism, allowing the load chain to be pulled freely so the lower hook can be quickly adjusted to the required position.

# OPERATION

## *Lifting Load*

- Set the selector lever to the "UP" position. Operate the lever handle in a clockwise direction to engage the lifting mechanism. As the handle is turned, the friction plates (20) and ratchet disc (13) are pressed firmly against the brake seat (33), causing these components to lock together and rotate as one assembly.
- This rotation is transferred through the driving shaft (11), disc seat (2), pinion shaft (4), and splined gear (3) to the load chain mechanism. Each movement of the lever handle advances the chain and raises the load in a controlled manner. Continue operating the handle steadily until the load reaches the required height. Avoid sudden or forceful movements, and ensure the load remains stable throughout the lifting process.

## *Operation*

**1.** Do not overload the lever block. Never lift or pull a load that exceeds the rated capacity shown on the product.

**2.** Operate by hand only. Do not attach a motor, powered tool, extension bar, or any other device to the lever handle.

**3.** Inspect and lubricate before use. Keep all moving parts properly lubricated. Before operating the lever block, check that no components are damaged, excessively worn, loose, or missing, and confirm that the mechanism operates freely without a load.

**4.** Check the hooks and load chain. Ensure the hooks are correctly positioned and securely engaged with the load and support point. Never apply a load to the tip of a hook. Make sure the load chain is not twisted, kinked, knotted, or obstructed before lifting.

**5.** Stop immediately if excessive force is required. Do not continue operating the lever handle if the required effort becomes greater than normal. Lower or secure the load safely, then check:

   **A.** Whether the load or chain is caught, obstructed, or entangled.

   **B.** Whether any part of the lever block is damaged, jammed, or operating incorrectly.

   **C.** Whether the load exceeds the rated capacity of the lever block.

# MAINTENANCE

- Before cleaning or performing any maintenance, you must ensure the tool is switched off and disconnected from the power supply.
- Compressed air is the most effective way to clean this tool. Always wear PPE safety goggles when cleaning tools with compressed air.
- Check the carbon brushes of the machine in the event of excessive sparking.
- Ventilation openings and switch levers must be kept clean. DO NOT attempt to clean by inserting pointed objects through openings.
- Do not use harsh chemicals or solvents when cleaning this tool.
- If you discover any damaged or broken parts, consult your nearest ToolShed for replacements and advise.

**WARNING**

***Always be sure that the tool is switched off and unplugged before attempting to perform any inspection or maintenance.***

## *Environment & Disposal*

- Packaging materials are raw materials and can be re-used. Separate the different packaging materials and take them to the appropriate waste disposal facility. More information can be obtained from your local authorities.
- Old machines do not belong in your household garbage! Dispose of old machines appropriately, we are all responsible for the environment.

## *Maintenance & Storage*

- Clean and store after use. Remove dirt, dust, and other contaminants from the lever block after each use. Lubricate the appropriate moving parts and store the unit in a clean, dry location away from moisture and corrosive materials.
- Servicing must be completed by a competent person. Maintenance, inspection, disassembly, and reassembly must only be carried out by suitably trained and authorised personnel. Do not allow unqualified persons to dismantle or repair the lever block.
- Align the gear timing marks during assembly. When reassembling the lever block, ensure the "0" marks on the two gears (2) are correctly aligned.
- Check brake assembly clearance. When the lever handle (20) is pressing the friction plates (13) and ratchet disc (33), maintain a clearance of 0.2–0.5mm between the lever handle and the end of the hexagonal slotted nut.
- Test after servicing. Following cleaning, maintenance, or repair, test the lever block without a load and then under an appropriate test load. Confirm that all functions operate smoothly and reliably before returning the unit to service.
- Keep brake surfaces clean. The brake friction surfaces must remain clean and free from oil, grease, dirt, and other contaminants. Inspect the brake mechanism regularly to identify wear, damage, or faults before they affect safe operation.

# TSCBL15 EXPLODED VIEW & PARTS LIST

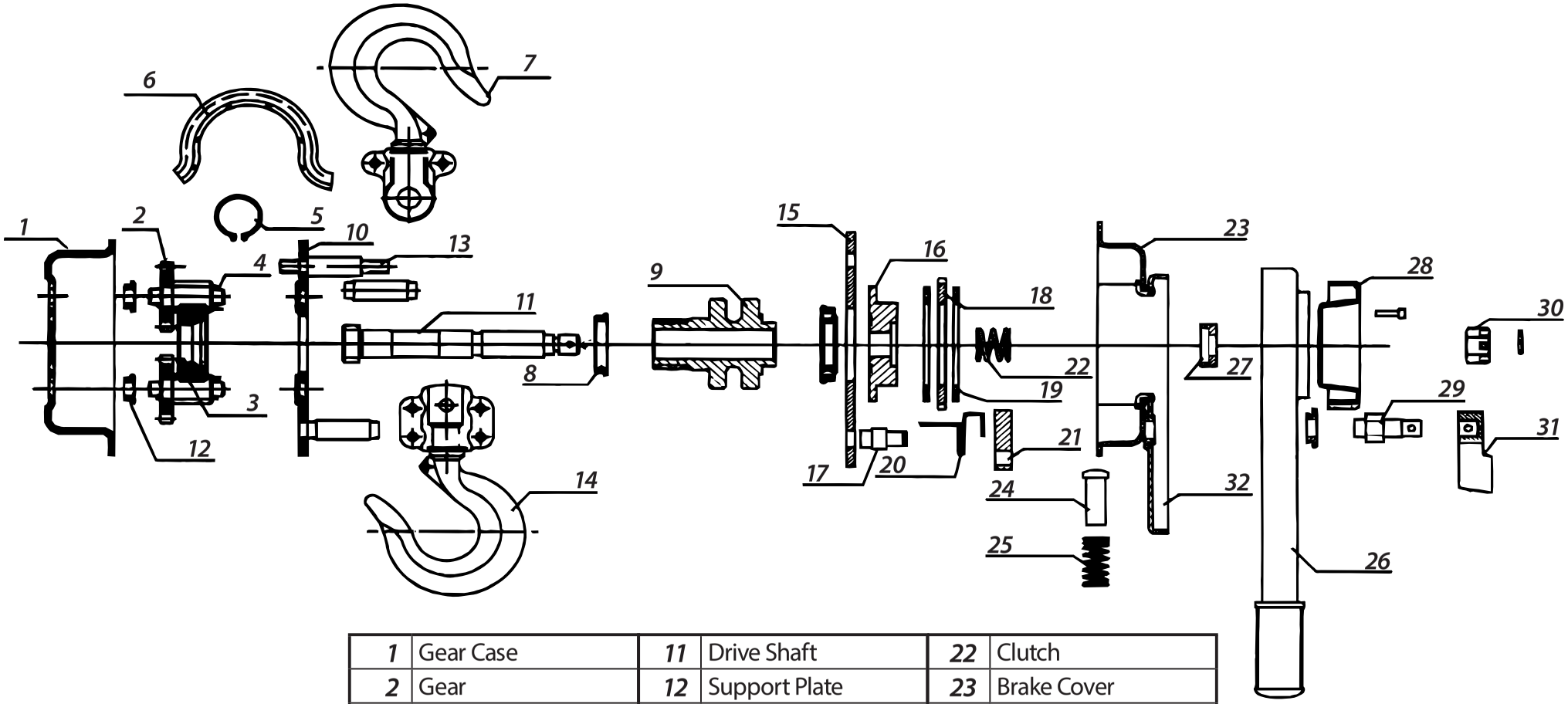


| | | | | | |
|---|---|---|---|---|---|
| 1 | Gear Case | 11 | Drive Shaft | 22 | Clutch |
| 2 | Gear | 12 | Support Plate | 23 | Brake Cover |
| 3 | Splined Gear | 13 | Stay Bolt | 24 | Spring Mandrel |
| 4 | Pinion Shaft | 14 | Bottom Hook | 25 | Changeover Spring |
| 5 | Retaining Ring | 15 | Side Plate A | 26 | Lever Handle |
| 6 | Chain Guide Cover | 16 | Brake Seat | 27 | Hook/Bolt/Nut Set |
| 7 | Upper Hook | 17 | Pawl Shaft | 28 | Hand Wheel |
| 8 | Bearing Ring | 18 | Brake Shaft Pin | 29 | Axle |
| 9 | Lifting Chain | 19 | Friction Plate | 30 | Slotted Nut |
| 10 | Side Plate B | 20 | Pawl Spring | 31 | Selector Block |
| | | 21 | Pawl | 32 | Handle Body |